VESA ADAPTOR INSTALLATION INSTRUCTION

1. Technical Parameter

Max VESA: 600×400 .

2. Parts List

(A) x2

(B) x2

(C)M6x8 screws x8

(D)Φ6 Flat washer x8

3. Installation and operation instructions

STEP-1

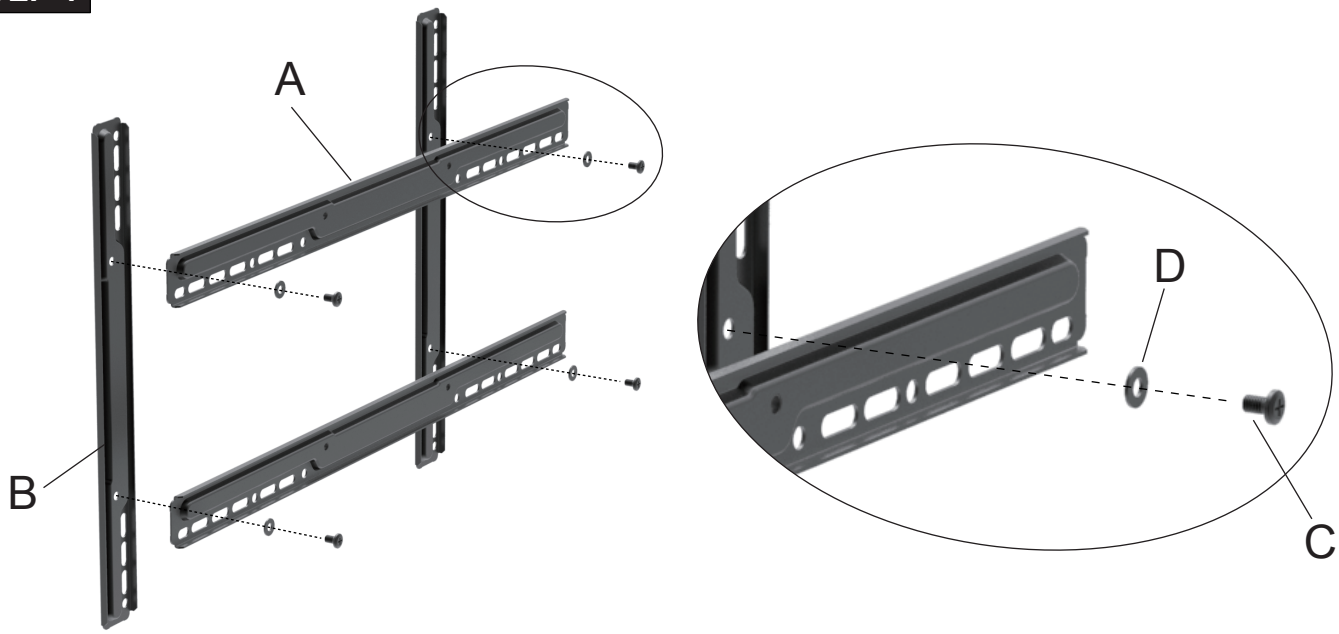
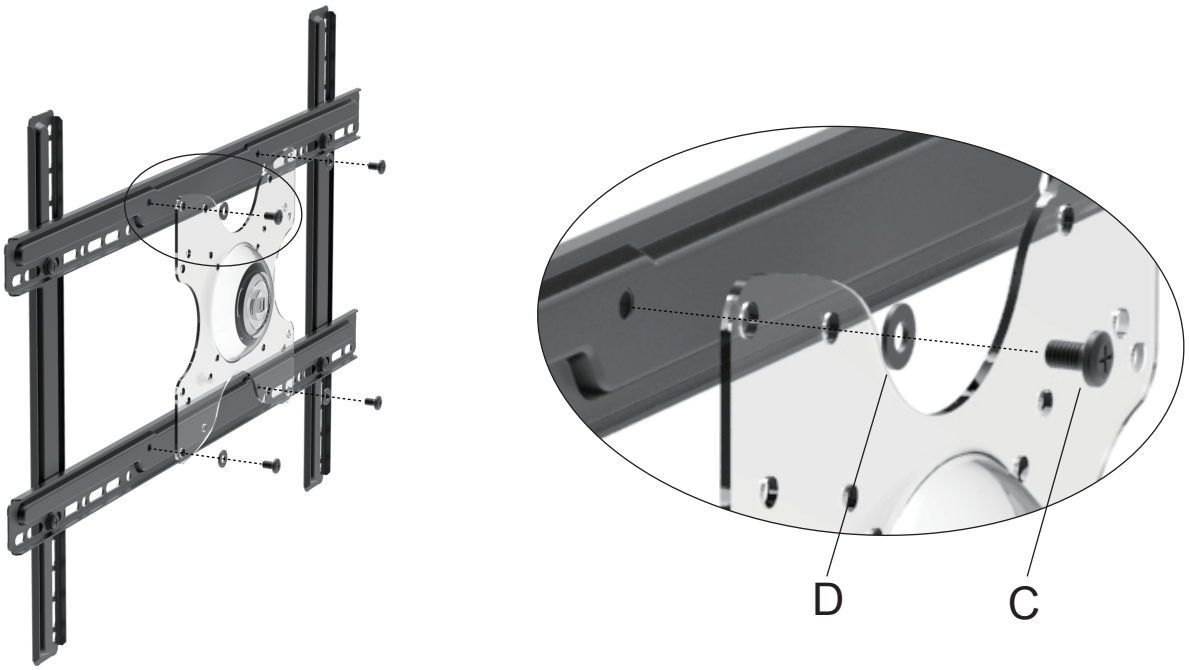
STEP-2